Phobos Large Chandelier

Item # 700PHB36NB-LED927

Designer: Kelly Wearstler

Specifications

Includes 22.3 watts, 1108 total delivered lumens, 2700K LED modules. Dimmable with most LED compatible ELV and Triac dimmers. 277V dimmable with 0-10V dimmers. Ships with (4) 12" and (2) 6" rigid stems in coordinating finish. 120V or 277V. Can be installed on a sloped ceiling up to 30°.

Length: 36"

Width: 36"

Height: 15.7"

Features

Dimmable

Available in LED

California Title 24 Compliant

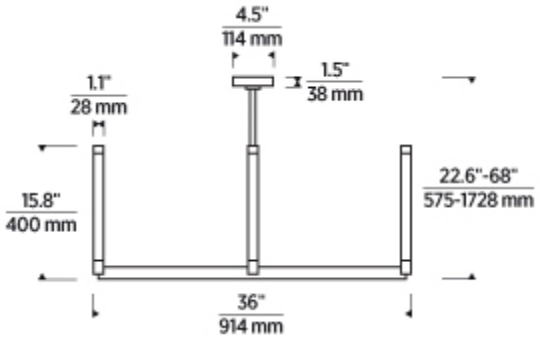

Phobos Large Chandelier

Item # 700PHB36NB-LED927

Designer: Kelly Wearstler

Ordering Information

Finish
BZ - Dark Bronze
NB - Natural Brass

Length
36 - 36.00000"

Lamp Type
-LED927 - INTEGRATED LED 90 CRI 2700K 120V